Rack Istos R-ISTOS1000

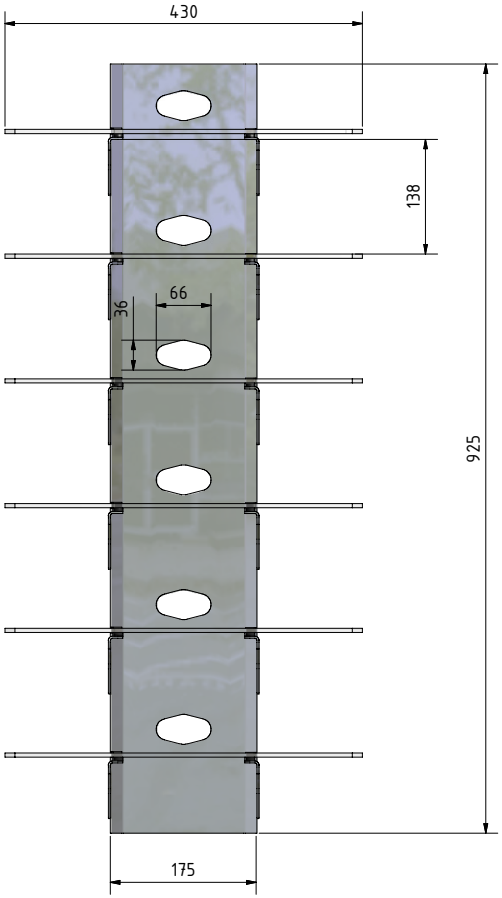

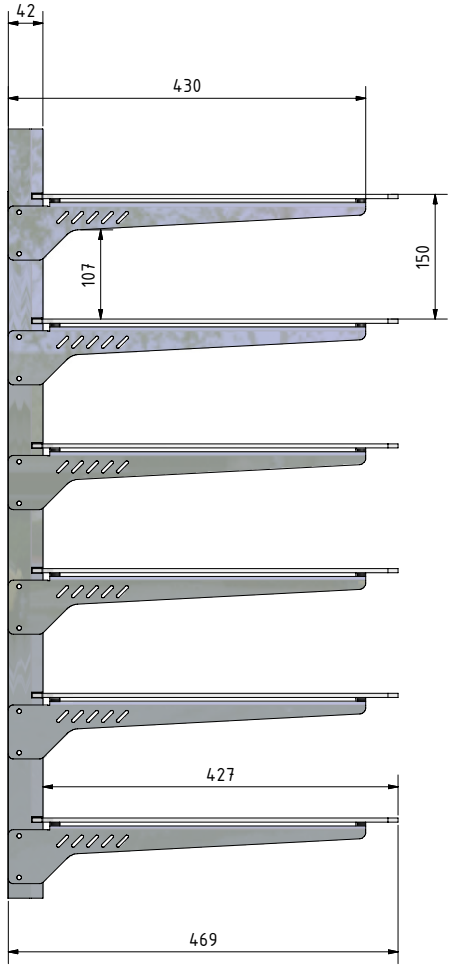

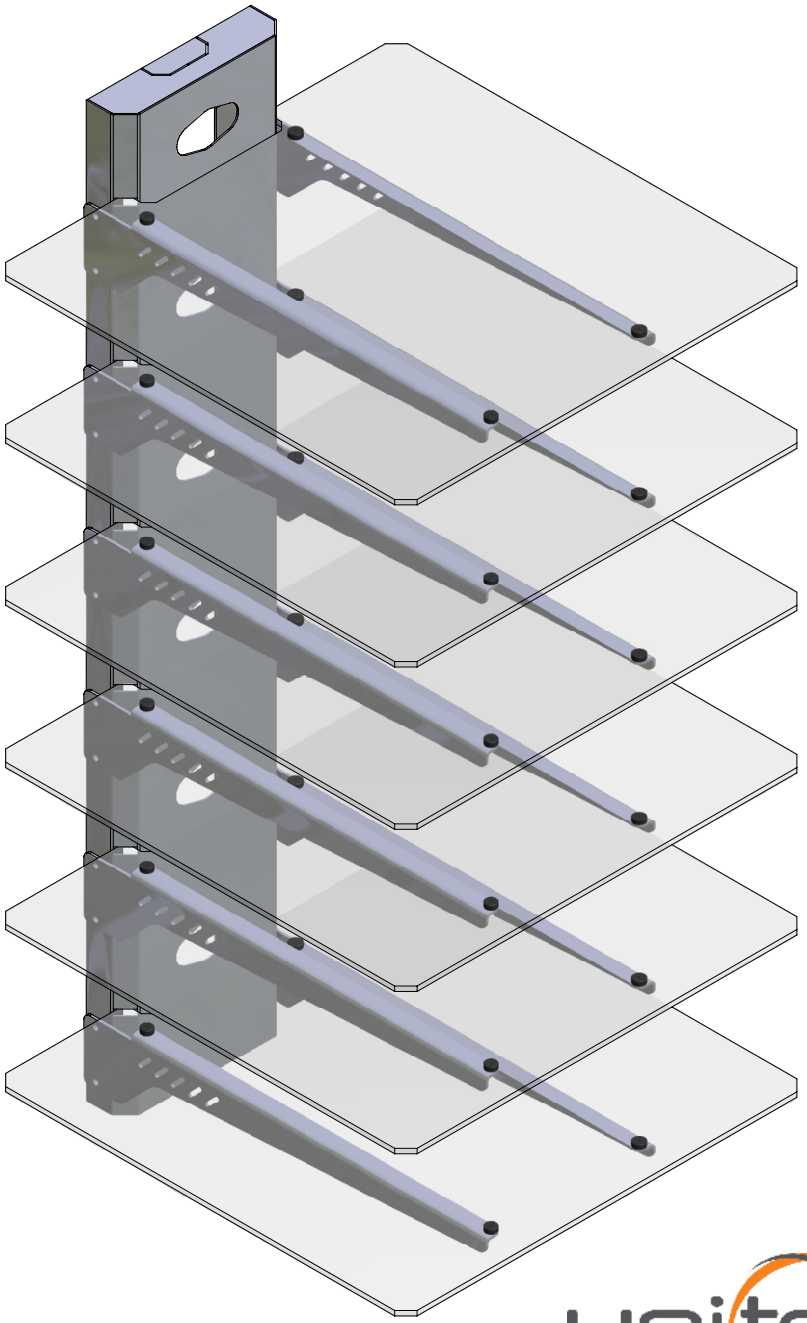

unitech systems